Poly CCX 400
Business Media Phone

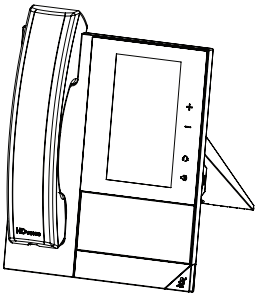

Package Contents

CCX 400

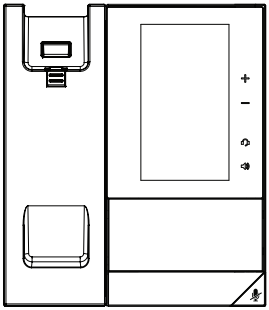

Stand

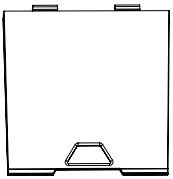

Handset

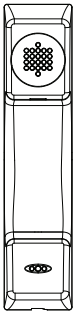

Setup Sheet

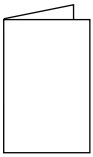

Handset Cord

Network Cable

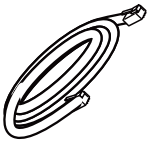

Optional Accesories

AC Power Adapter
(varies by region)

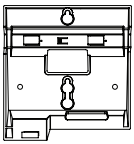

Wallmount

For more information on optional accessories, contact your reseller.

Features

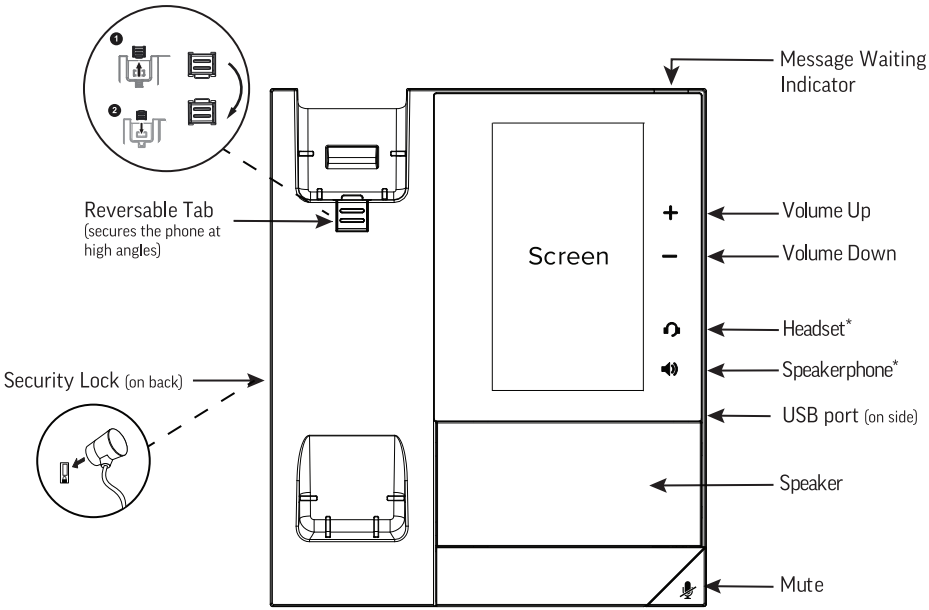

* Icon displays when the phone is powered on.

Connect Desktop Stand

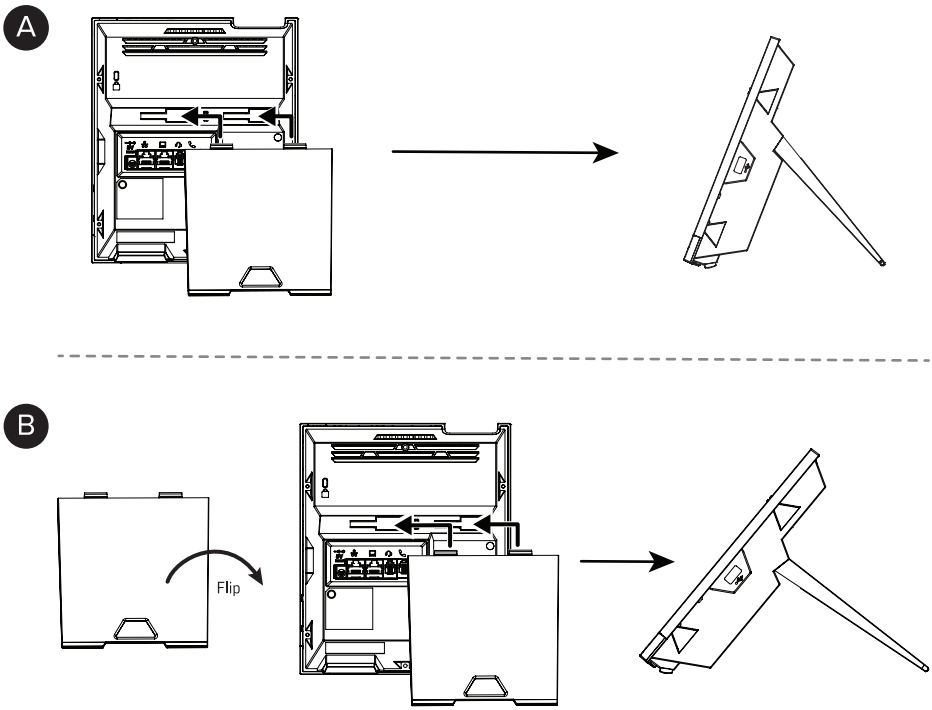

Connect Cables

Optional: Ethernet connection to computer

Cable Groove
(Press straight part
of cable into groove)

AC power connection (optional accessory)
Use if Power over Ethernet (POE) is unavailable.

Put cables through the slot in the
stand before connecting cables to the phone
for proper cord management.

Note: Only use the power supply designed for your phone to avoid damaging the phone.

Connect Optional Headset

USB port (on side)

RJ-9 port

EHS port

Your phone supports USB and wired headsets, including Electronic Hookswitch (EHS) headsets.

For connection directions, refer to your headset documentation. Standard headsets use the RJ-9 or USB port while EHS headsets typically use the RJ-9 and EHS ports.

BY USING THIS PRODUCT, YOU ARE AGREEING TO THE TERMS OF THE END USER LICENSE AGREEMENT (EULA) AT: http://documents.polycom.com/indexes/licenses. IF YOU DO NOT AGREE TO THE TERMS OF THE EULA, DO NOT USE THE PRODUCT, AND YOU MAY RETURN IT IN THE ORIGINAL PACKAGING TO THE SELLER FROM WHOM YOU PURCHASED THE PRODUCT.

Refer to the Limited Warranty section of the Product Warranty Guide found under Service Policies at http://support.polycom.com/

Polycom Documentation
www.polycom.com/support

ENERGY STAR®:

Backlight intensity and timeout can be adjusted in basic user settings menu. By default, after the phone is idle for 40 seconds, the backlight dims. The backlight automatically turns on with any phone activity.

© 2019 Plantronics, Inc. All rights reserved. Poly, the propeller design, and the Poly logo are trademarks of Plantronics, Inc. All other trademarks are the property of their respective owners.

Contact Information:
Contact your Authorized Reseller for Assistance.
www.poly.com
Plantronics, Inc. 345 Encinal Street Santa Cruz, California 95060

1725-49705-001A